REV	DATE	MODIFICATION	DRAWN
	25/12/09		

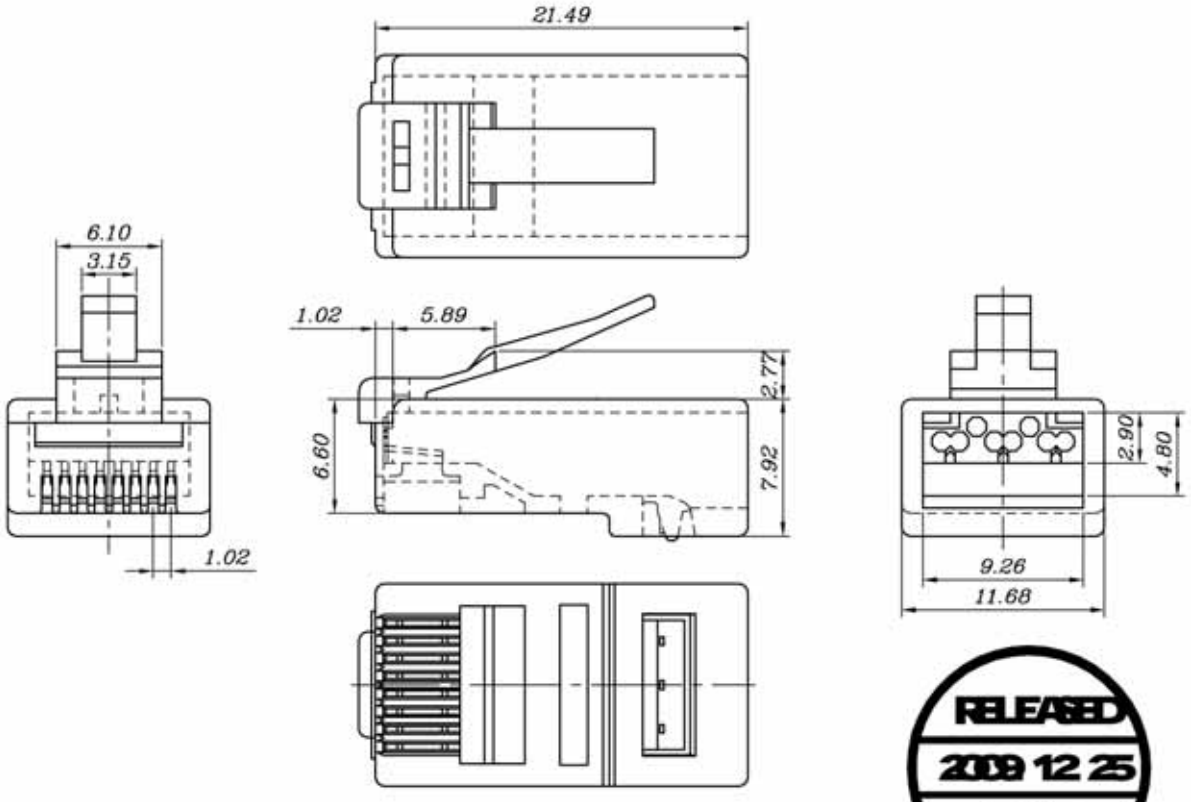

SPECIFICATIONS
1.ELECTRICAL:
UL APPLICATIONS: 250 VOLTS AC MAX., AT 2 AMPS.
DIELECTRIC WITHSTANDING VOLTAGE : 500 VOLTS AC.
INSULATION RESISTANCE: 100 M Ω.
TERMINATION: RESISTANCE 20m Ω MAX AFTER ENVIRONMENTAL TESTING.
2.MECHANICAL:
CABLE-TO-PLUG TENSILE STRENGTH : 20POUND MIN.
DURABILITY : 200 MATING CYCLES.
3.MATERIAL & FINISH:
HOUSING: POLYCARBONATE, UL94V-0 OR UL94V-2.
COLOR : TRANSPARENT OR OTHER COLOR ARE AVAILABLE.
CONTACT BLADE: COPPER ALLOY.
CONDUCTOR : STRANDED & SOLID WIRE , 24AWG, 26 AWG.
GOLD PLATING: 3u"~50u",ARE AVAILABLE.
SHIELDED SHELL: COPPER ALLOY.

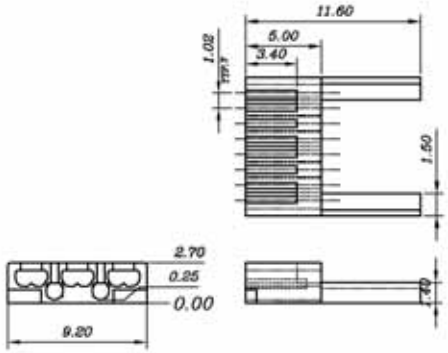

RELEASED
2009 12 25
R&D

BLADE:	Z		CABLE TYPE	ROUND	
Drawing					
Mark			Mark	✓	
GOLD PLATING					50u"
Mark					✓

RoHS

DIMENSION IN mm (Inch) TOLERANCE UNLESS OTHERWISE SPECIFIED		MATERIAL PC	DWG NO. TD168R
.X±0.20	.X°±5°	TITLE	
.XX±0.10	.XX°±2°		
APPROVAL	CHECKED	DRAWN LiJirg	SCALE 2/1 / SHEET 1/1
			PROJ. / REV A