REV	DATE	DESCRIPTION
A	06/26/'00	

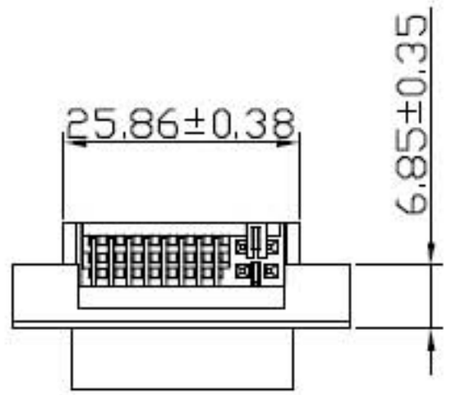

MATERIALS:

Insulator: High temperature plastic UL-94V-0
Contact: Phosphor bronze
Shell: Zine alloy(K-2) with nickel plating50u" over
Contact plating: Gold on contact area and tin/lead onsolder tail
Temperature range: -55°C to +85°C

ELECTRICAL:

Voltage rating: 250VAC. R.M.S.
Current rating: 1 AMP
Insulation resistance: 2000 Megohms Min.
Contact resistance: 30millohms MAX. (initial)

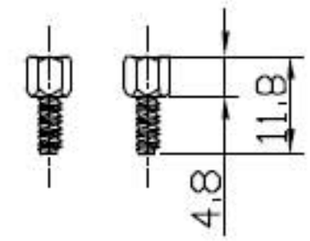

#4-40 UNC SCREWS

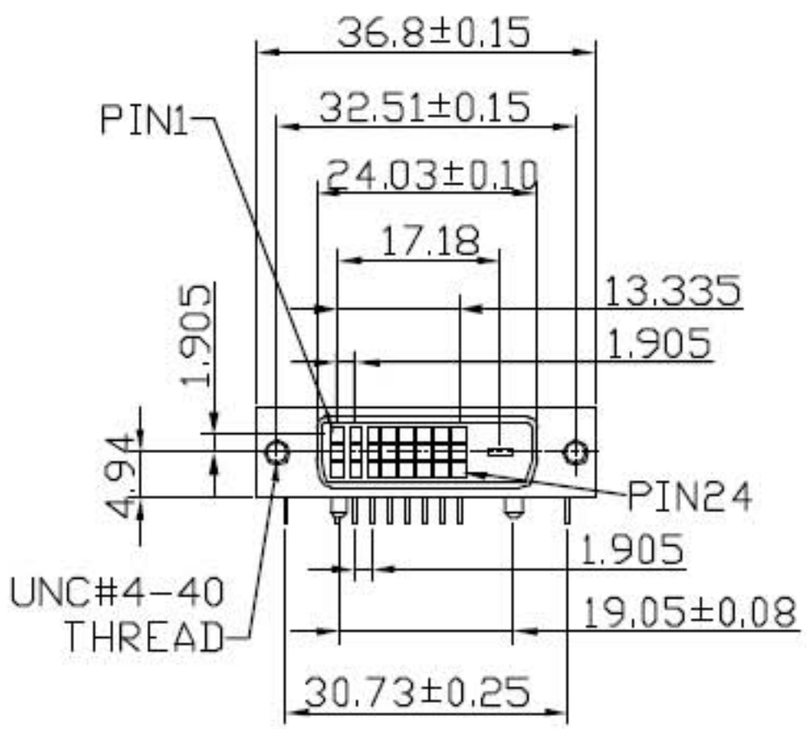

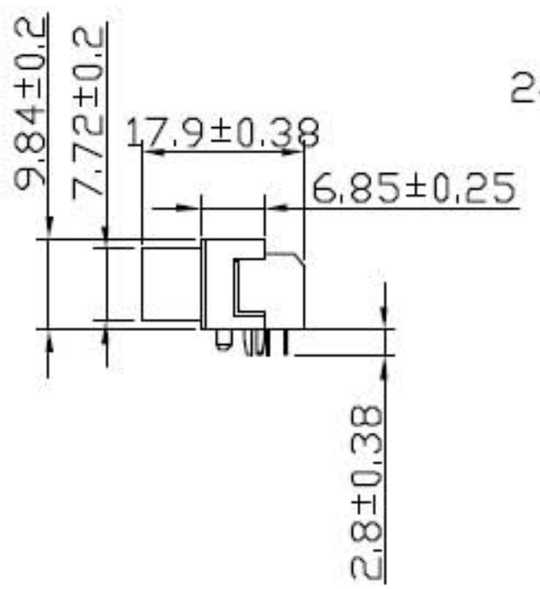

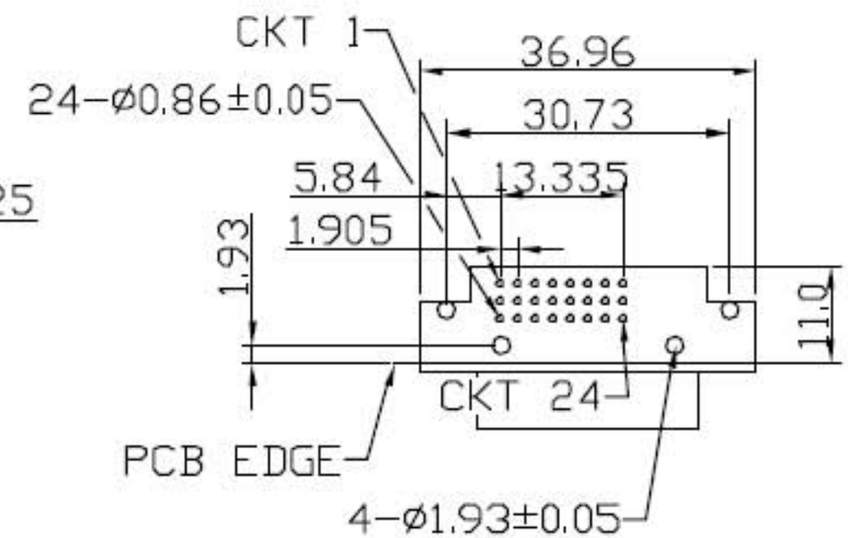

RECOMMENDED PCB LAYOUT

UNIT : mm

JKL TECHNOLOGY CO., LTD.

WWW.JKL-TECH.COM.TW

MODEL NAME:
DVI FEMALE RIGHT ANGLE CONNECTOR 24PIN WITH HEX SCREW (DIGITAL)

SELECT / DIM \ TOL	1	2	3	EXTRA
0.000	0.05	0.05	0.10	
0.00	0.10	0.15	0.20	✓
0.0	0.15	0.25	0.30	✓
0.	0.25	0.30	0.40	✓
ANGLE	1.0°	3.0°	5.0°	✓

PART NO. DVIR-24S-B	
APPROVED BY:	FILE NO. FIG00468
CHECKED BY:	SCALE: FREE
DRAW BY: KAO	DATE : 890628

Document No.:ENG-4-01