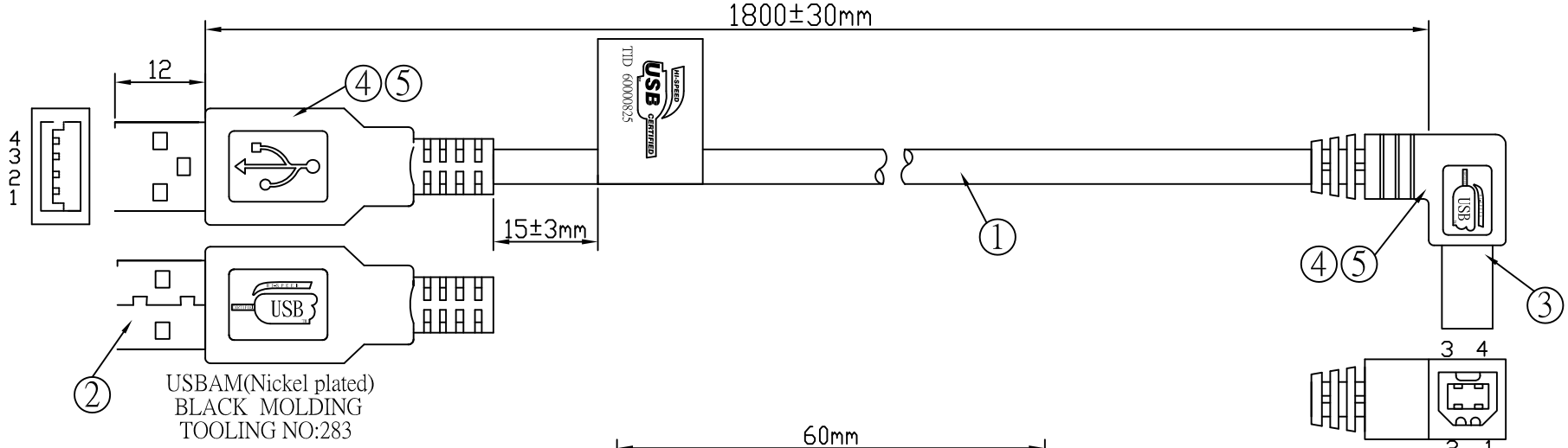

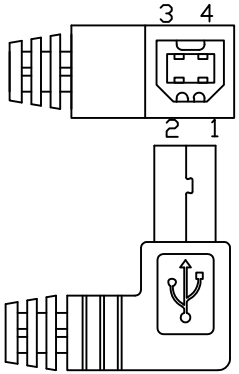

USBBM(Nickel plated)
BLACK MOLDING
TOOLING NO:063

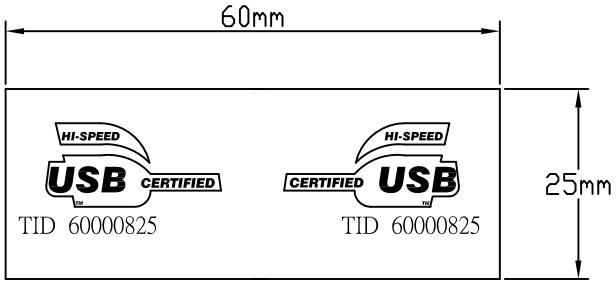

USB STICKER

PIN ASSIGNMENT:

1	2	3	4	64
1	2	3	4	64
RED	WHITE	GREEN	BLACK	SHIELD
	#28	#28		
	PAIR			

OPEN/SHORT TEST: 100% TEST.
INSULATION: 5M.

No.	Description	Qty
⑥	USB Sticker(60*25mm)	1PCS
⑤	PE	1PCS
④	BLACK 45P PVC	13g
③	USBBM(WHITE INSULATOR,Nickel plated),SHORT BODY	1PCS
②	USBAM(WHITE INSULATOR,Nickel plated)	1PCS
①	UL2725, 2.0VER,28#*1P+24#*2C+AL+B(AM BRAID),OD=5.0mm,BLACK PVC JACKET.L=1800mm	1PCS

Company		Goods Code		Draw	ZXW	Date	2014.05.21		D		
ITEM NO.	SB2408	Drawing Evidence		Check		Date			C		
Goods NO.									B		
Original NO.		Unit(mm)		Approval		Date			VER. A	REVISE	Date