KPW-T2P25

Industrial IEEE 802.3at High Power PoE Splitter

DIN-Rail Dimension

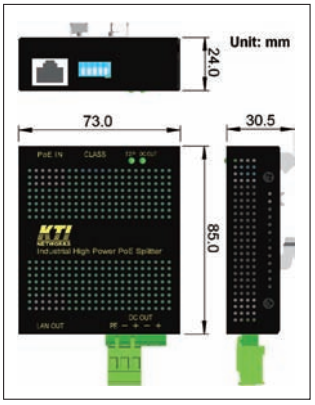

Panel Dimension

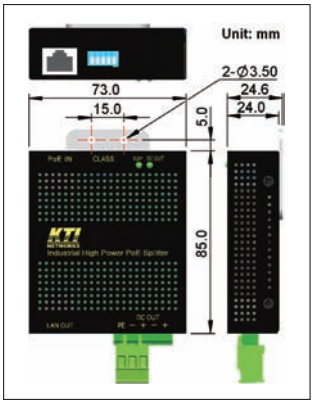

KTI Network's KPW-T2P25 is a high power PoE splitter which integrates Power over Ethernet (PoE) technology to PoE incapable network device by just using a single Cat.5 cable for both power and data transaction. The equipments such as Wireless Router, AP, Network Camera, Print server, and Media converter which connect to the PoE splitter, all devices become PoE enabled to eliminate the need of power outlets as well as cable installation and expense.

The splitter is equipped with DIP SW that allows user to select one from five different classes for demanding power from a remote PoE switched port or mid-span injector. This feature supports efficient power management at the advanced PSE side. It supports Type 1 PSE for power up to 13 Watts min. and Type 2 PSE for power up to 30 Watts. For industrial applications, the splitter is also equipped with optional brackets for Din-Rail mounting and panel mounting. To enhance application safety, the splitter is featured short-circuit protection, low voltage lock out, inrush current limit and thermal protection.

Four optional models with different DC output voltages, 5V/9V/12V are available for purchasing to meet different appliance power specification. For easier, cost-effective PoE network installation, the PoE splitter is your best solution to protect original investment.

Key Features:

- Enable PoE incapable network device with PoE capability
- IEEE 802.3at and 802.3af compliance
- Support 10BASE-T, 100BASE-TX, and 1000BASE-T
- Support Alternative A or Alternative B PoE input over Cat.5
- Provide a power class selection DIP for demanding power from PSE
- Support Type 1 PSE classification and Type 2 PSE 2-event classification
- Regulated DC power output with four optional voltages
- Flexible mounting support, light weight and compact

Specifications:

Standard	IEEE 802.3 10BASE-T, 100BASE-TX, 1000BASE-T
PoE In Jack	Shielded RJ-45 10BASE-T, 100BASE-TX, 1000BASE-T support Power pins – Pin1/2/3/6 and Pin4/5/7/8 (support both) LAN cable - Cat.5 or better
PoE Standard	IEEE 802.3af Type 1, IEEE 802.3at Type 2
PoE Power Class	Type 1 Class 0 ~ Class 3, Type 2 Class 4 (DIP SW selectable)
PoE Input Voltage	Class 0~3: 36 ~ 57VDC (PSE Type 1 output) Class 4: 42.5 ~ 57VDC (PSE Type 2 output)
LAN Out Jack	Shielded RJ-45 10BASE-T, 100BASE-TX, 1000BASE-T std. LAN cable - Cat.5 or better

DC Power Output	5P Terminal block – PE (protective earth), DC+/DC-, DC+/DC- Voltage options: 5V, 9V, 12V (Model options) Power wires: 12 ~ 22 AWG (1 meter max.)

PSE Type	PoE Input Range* (W)	DC Power Output (W)
1	12.95 ~ 15.4	9 ~ 11
2	25.5 ~ 34	21 ~ 28

*The range means the possible maximum power received by the splitter. It depends on the power capability delivered by PSE and the connection length between the PSE and splitter.

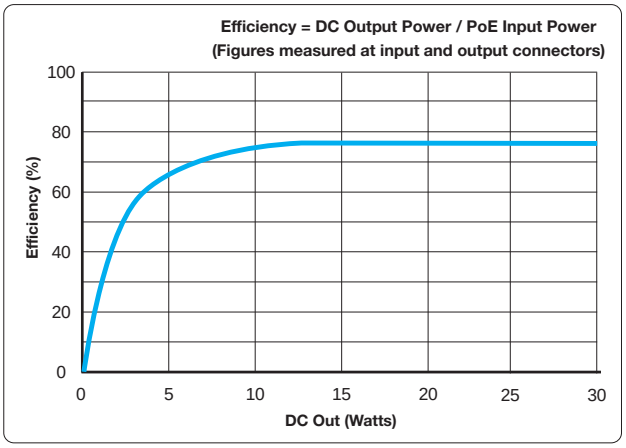

LED Display	Type 2 PoE input status, DC Power output status
DIP SW	Power class selection for PSE classification
Housing	Enclosed metal with no fan
Dimension	73 x 85 x 24 mm (WxDxH)
Accessory	TB-to-DC plug cable
Mounting Support	DIN-Rail, Panel mounting (Optional)
Temperature	Operating Temperature: -30°C ~ 70°C Storage Temperature: -30°C ~ 85°C Relative Humidity: 10% ~ 90% non-condensing
Approval	FCC Class A, VCCI Class A, CE mark Class A, IEC60950-1 safety

Ordering Informations:

KPW-T2P25-5V	5VDC power output
KPW-T2P25-9V	9VDC power output
KPW-T2P25-12V	12VDC power output
KC-4DR	DIN-Rail mounting
PMB-303	Panel mounting bracket

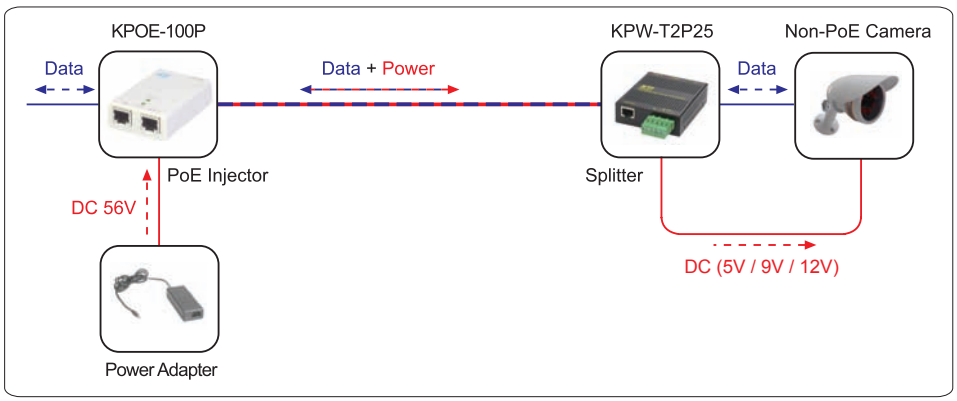

Related PoE Products:

KPOE-100
IEEE 802.3af mid-span injector

KPOE-100P
IEEE 802.3at PSE High Power
Mid-span Injector

KPOE-800
Modular 8-Port Midspan
Power over Ethernet Injector

KSD-541-P
Industrial 5-Port
Fast Ethernet Switches with
1 SFP Slot and 4 PoE PSE Ports

KGS-0820-P
Managed 8-Port
Gigabit Ethernet Switches with
2 SFP Slots and PoE options

KGD-802-B-P
Industrial 8-Port
Gigabit Ethernet Switches with
2 SFP Slots and 4 PoE PSE Ports

KGS-2423-Px
Managed 24-Port
Stackable Gigabit Ethernet Switches
with 4 SFPs and 24 PoE+ PSE Ports

FCC Part 15,Class A
CISPR 22 Class A
VCCI Class A

Katron Technologies Inc.
15F-7, No. 79, Sec. 1, Hsin Tai Wu Rd.,
Hsi-chih, New Taipei City, Taiwan, R.O.C.
Tel: 886-2-2698-3878
Fax: 886-2-2698-3873
E-mail: kti@ktinet.com.tw
URL: http: //www.ktinet.com.tw

KTI Networks Inc.
10415-A Westpark Drive, Houston,
TX 77042. U.S.A.
Tel: 1-713-266-3891
Fax: 1-713-914-0555
E-mail: contact@ktinet.com
URL: http: //www.ktinet.com

Trademarks: All brand names are trademarks or registered trademarks of their respective holders.
This information is subject to change without prior notice.