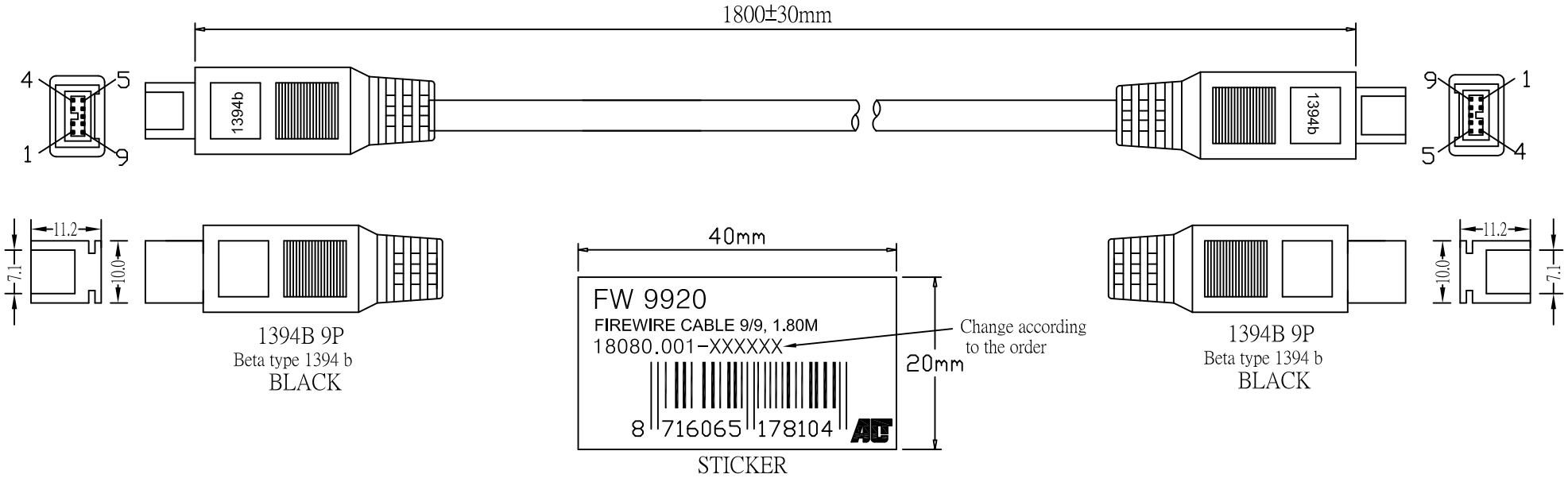

NOTE:

1. CABLE:UL20276,AL+B,(30#*2P+2EAM)*2C+26#*2C+MAB 90%, BLACK ,OD=5.5mm,PVC JACKET.(AM)
2. LENGTH:1800mm
3. CONNECTOR:IEEE 1394 9P *2,(Beta type 1394 b,BLACK INSULATOR NICKEL PLATED)
4. MOLD: BLACK
5. CONTACTS:

IEEE1394 9P	1	2	9	3	4	5	6	8	64
IEEE1394 9P	3	4	5	1	2	9	6	8	64
	RED #30	GREEN	DRAIN	BLUE #30	ORANGE	DRAIN	BLACK	WHITE	
	TP			TP					

6. OPEN/SHORT TEST: 100% TEST.
   INSULATION: MIN. 5M.

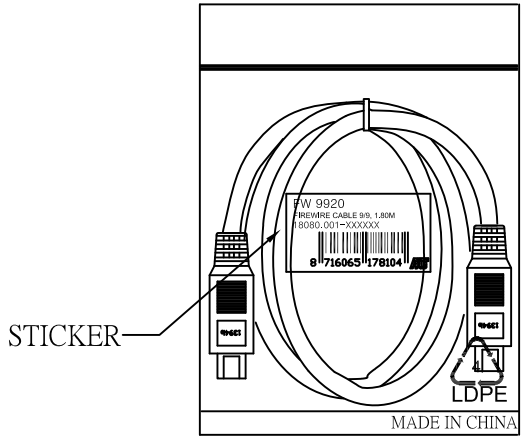

1PCS/PE BAG(0.06*190*300mm)+STICKER

ROHS COMPLIANT

Company	IBV	Goods Code		Draw	JimXiao	Date	2008.06.12		D		
ITEM NO.	FW9920	Drawing Evidence:		Check		Date			C	CHANGE CONTACTS COLOR	11.12.21
Goods NO.									B	Adding packaging info	2011.01.18
Original NO.	S-********	Unit(mm)		Approval		Date			VER. A	REVISE	Date