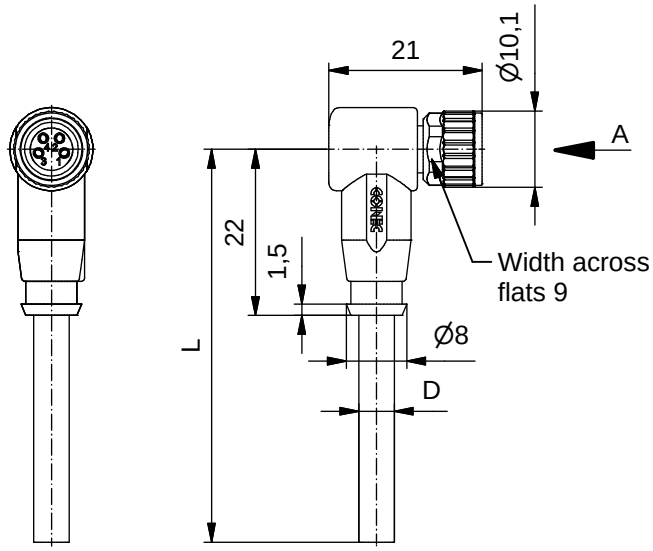

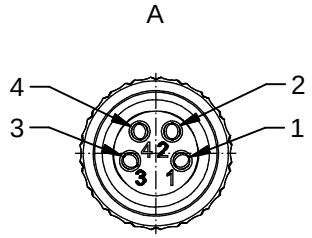

Technical specification :

Rated voltage: IEC 61076-2-104	30 V
Current rating: IEC 61076-2-104	3 A at 40℃
Insulation resistance: IEC 60512	>=100 MΩ
Pollution degree: IEC 60664-1	3/2
Degree of protection: IEC 60529	IP 67, in mated condition
Temperature range: IEC 60664-1	-30℃ ... +80℃
Mating cycles: IEC 60512-9a	>=100

Materials:

Contact:	CuZn
Contact plating:	Nickel, gold plated
Contact carrier:	TPU GF, UL 94
Sealing:	FPM
Coupling nut:	GD-Zn, nickel plated
Moulding body:	TPU, UL 94, grey

Installation specification:

Recommended torque:	0,4 Nm
Conec installation tool:	Torque wrench: 36-000200 Insert across flats 9: 36-000210

Contact assignment:

1) brown
2) white
3) blue
4) black

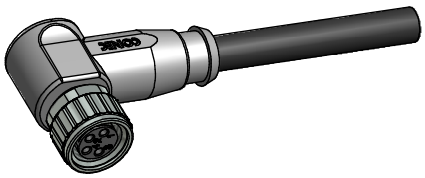

Part no:	Description:	Length L:	Cable:
42-10052	SAL - 8 - RKW4 - 2 / K1	2m	TPU, UL 20549, black, 4x0,25mm² Cable: 781-K12400
42-10053	SAL - 8 - RKW4 - 3 / K1	3m	
42-10054	SAL - 8 - RKW4 - 5 / K1	5m	
42-10055	SAL - 8 - RKW4 - 10 / K1	10m	
42-xxxxx	SAL - 8 - RKW4 - ... / K1	x	

D see data sheet cable

DO NOT ALTER CAD DRAWING BY HAND

Directive 2002/95/EC RoHS compliant

Index: b 16.03.11 VF Ä3945
Coupling nut modified, spanner flats added, data sheet modified

dim. in mm

	date	name
drawn	04.10.07	Franz
appd.	04.10.07	Mankopf

tolerance of cable: L <= 4m: L + 40mm; L > 4m: L + 1%

general tolerance: 0 ± 0,50mm; 0,0 ± 0,25mm; 0,00 ± 0,10mm

THIS DRAWING MAY NOT BE COPIED OR REPRODUCED IN ANY WAY, AND MAY NOT BE PASSED ON TO A THIRD PARTY WITHOUT WRITTEN PERMISSION. OWNERSHIP AND COPYRIGHT OF CONEC GmbH

title: Female connector M8x1 angled

dwg no: 42K1A014

part no: see table