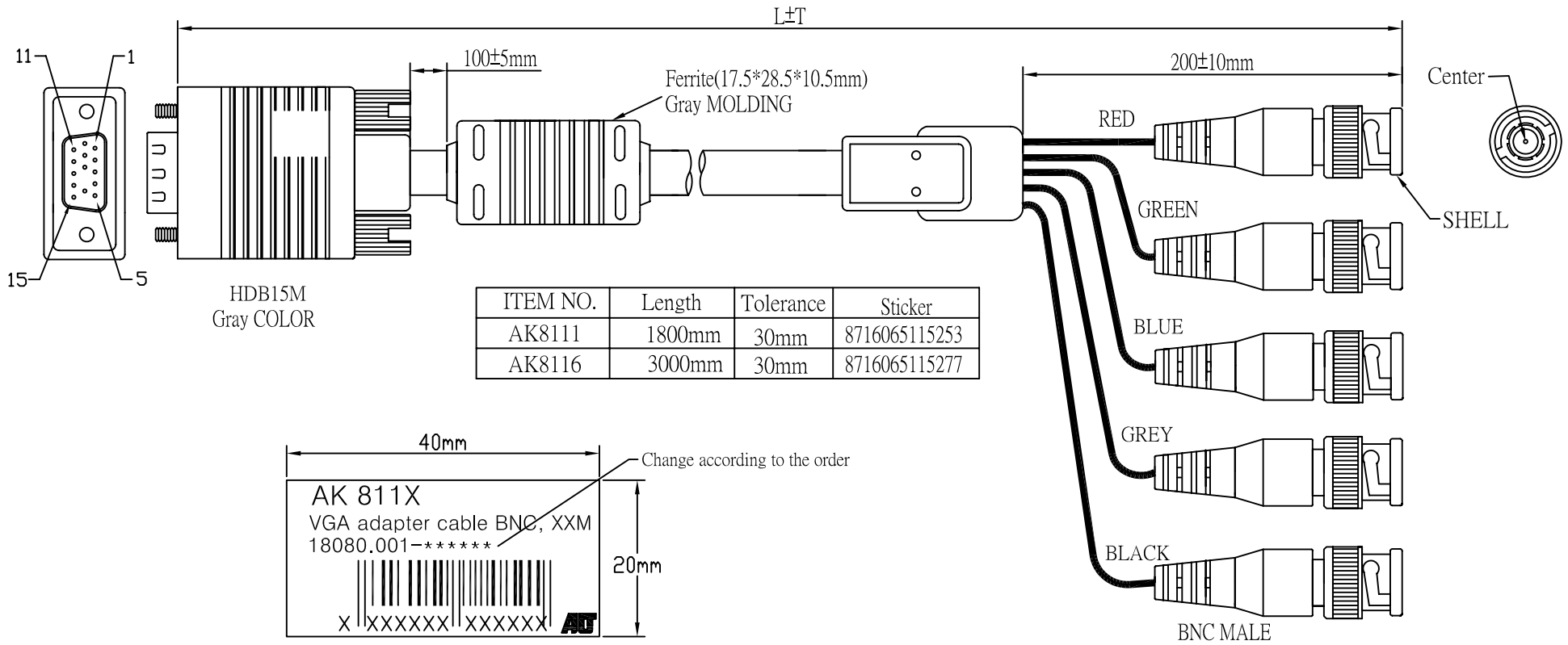

ITEM NO.	Length	Tolerance	Sticker
AK8111	1800mm	30mm	8716065115253
AK8116	3000mm	30mm	8716065115277

STICKER

NOTE:

1. CABLE:UL2919 28#*5COAX+AL+B,OD=9.0mm,Gray COLOR,PVC JACKET.
2. LENGTH:L
3. CONNECTOR:HDB15 M*1PCS,(BLUE INSULATOR OUT 9 PIN) BNC MALE*5PCS,
4. MOLD: HDB 15P MOLDING/BNC M MOLDING.
5. SCREW:#4-40 SCREW*2PCS.
6. CONTACTS:

HDB 15M	6+7+8+10+11+SHELL	1	2	3	13	14
BNC M	RED + GRN + BLU + GRY + BLK SHELL SHELL SHELL SHELL SHELL	RED Center	GRN Center	BLU Center	GRY Center	BLK Center

7. OPEN/SHORT TEST: 100% TEST.
   INSULATION: 5M.

RoHS Compliant

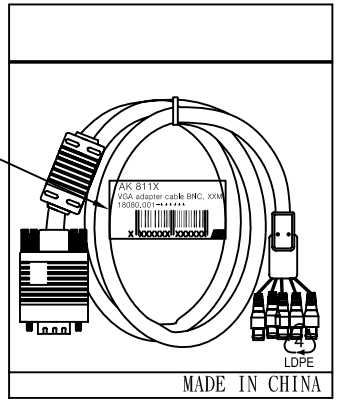

1PCS/PE BAG(0.06*190*300mm)+Sticker

Company	IBV	Goods Code		Draw	FC001 WJF	Date	2009.10.13		D	Remove R37.7 and point 4	10.05.03WJF
ITEM NO.	AK811X	Drawing Evidence:		Check		Date			C	revised srew spec/contacts	10.04.26HQS
Goods NO.									B	changed" Screw spec / adding packaging info"	10.03.04WJF
Original NO.	S-******* Unit(mm)			Approval		Date			VER. A	REVISE	Date