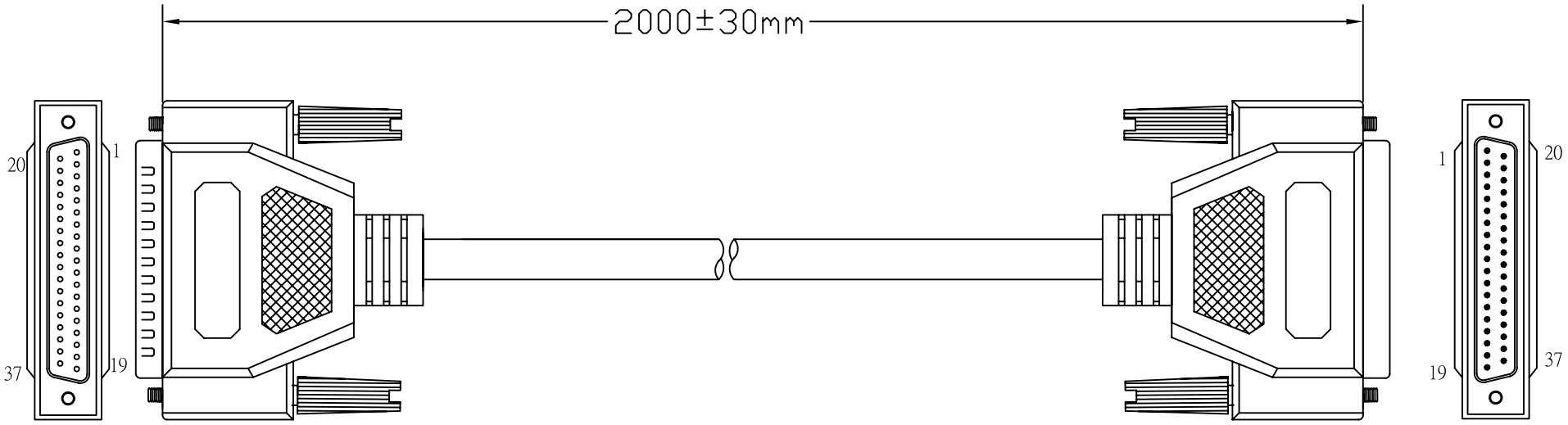

DB 37M(NICKEL PLATED)
BEIGE MOLDING

DB 37F(NICKEL PLATED)
BEIGE MOLDING

NOTE:

1. CABLE:28AWG,NON-UL,AL-FOIL,37C+1,BEIGE MOLDING,OD=9.0mm.PVC JACKET.(CCA)
2. LENGTH: 2000mm
3. CONNECTOR: DB37M*1PCS,DB37F*1PCS.(BLACK INSULATOR,NICKEL PLATED)
4. MOLD:BEIGE MOLDING.
5. SCREW: 4*40 INCH THUMBSCREW *4PCS
6. CONTACTS:

DB37M	1	2	3...	35	36	37	64
DB37F	1	2	3...	35	36	37	64

7. OPEN/SHORT TEST: 100% TEST.
   INSULATION: MIN. 5M.

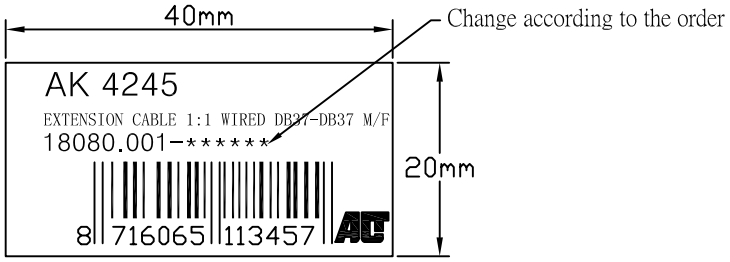

Barcode

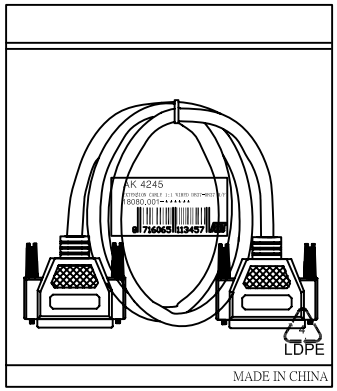

RoHS Compliant

1PCS/PE BAG(0.06*190*300mm)+Barcode

Company	IBV	Goods Code		Draw	FC001 WJF	Date	2010.02.26		D		
ITEM NO.	AK4245	Drawing Evidence:		Check		Date			C		
Goods NO.				Approval		Date			B	REVISED THE WORD"according"	10.03.12WJF
Original NO.	K-2710165	Unit(mm)							VER. A	REVISE	Date