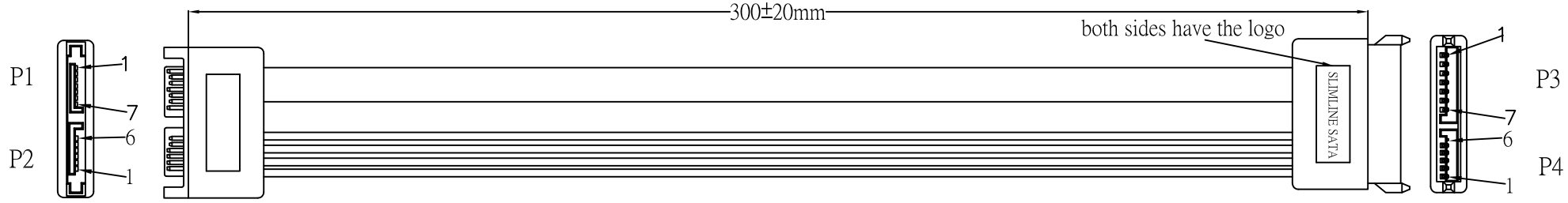

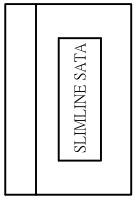

SATA (6+7) MALE
BLACK MOLDING

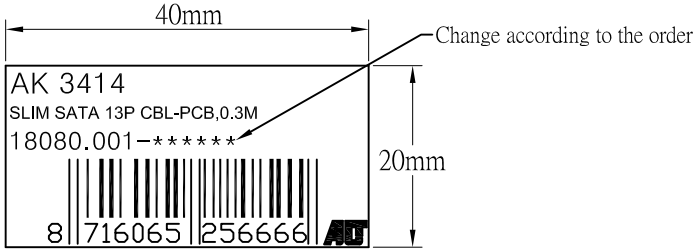

STICKER

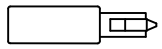

SATA (6+7) FEMALE
BLACK MOLDING

NOTE：

1.CABLE:A:UL 1007 22AWG,BLACK*2PCS/RED*1PCS/YELLOW*1PCS COLOR,PVC JACKET.
B:UL2725,(26#*2C+AL/MY+D*2)*2F,OD=2.4*8.0mm,RED FLAT CABLE,PVC JACKET.

2.LENGTH:300mm

3.CONNECTOR:SATA(6+7) MALE*1PCS(BLACK),SATA(6+7)FEMALE*1PCS.

4.CONTACTS:

P2	1	2	3	5
P4	1	2	3	5
	BLACK	BLACK	YELLOW	RED

P1	1+4+7	2	3	5	6
P3	1+4+7	2	3	5	6

5. OPEN/SHORT TEST: 100% TEST.
CONTACT RES:10Ω(MAX)
INSULATION:5MΩ/MIN.
HI-POT TEST:DC300V/10MS.

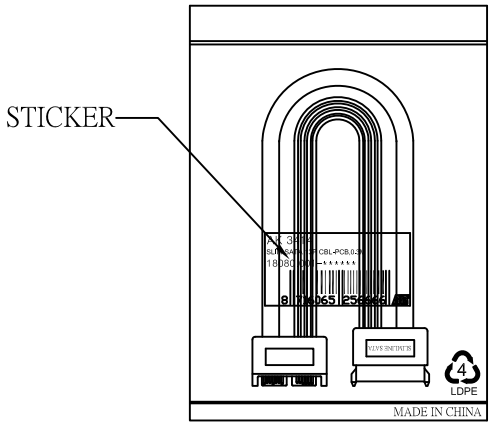

1PCS/PE BAG(0.06*100*200+STICKER

RoHS Compliant

Company	IBV	Goods Code		Draw	FC001 WJF	Date	2010.03.18		D		
ITEM NO.	AK3414	Drawing Evidence:		Check		Date			C	AMEND TYPING MISTAKE	20111202 Kobe
Goods NO.									B	Adding packaging info	100419(cy)
Original NO.	S-*******	Unit(mm)		Approval		Date			VER. A	REVISE	Date