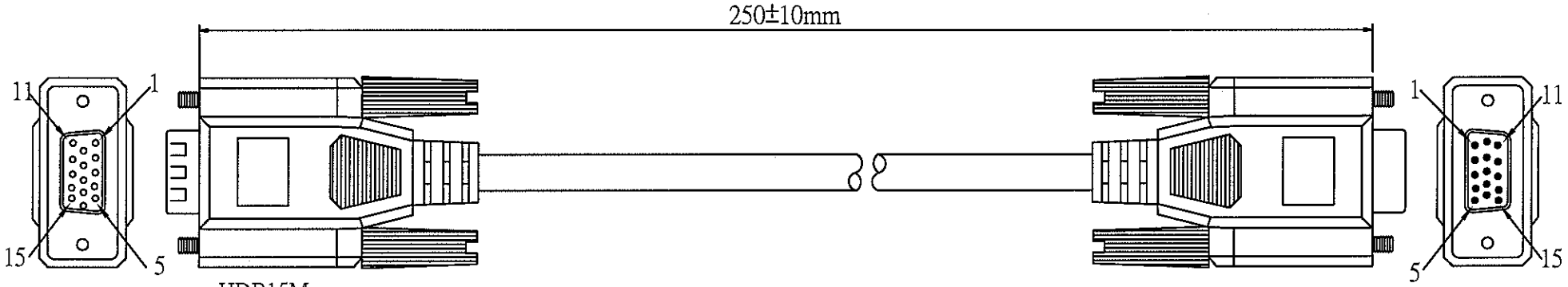

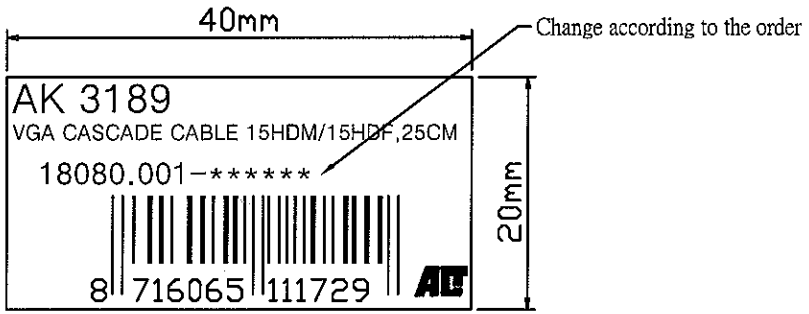

Barcode

NOTE:

1. CABLE: UL2464 24#*15C+1+AL,OD=6.0mm,BEIGE COLOR,PVC JACKET.
2. LENGTH:250mm
3. CONNECTORS:HDB15M*1PCS,HDB15F*1PCS(BLACK INSULATOR FULL PIN)
4. SCREW : QC24 INCH SCREW*4PCS
5. CONTACTS:

HDB 15M	1	2	3	4	5	6	7	8	9	10	11	12	13	14	15	64
HDB 15F	1	2	3	4	5	6	7	8	9	10	11	12	13	14	15	64

6. MOLD: BEIGE MOLDING
7. OPEN/SHORT TEST: 100% TEST.

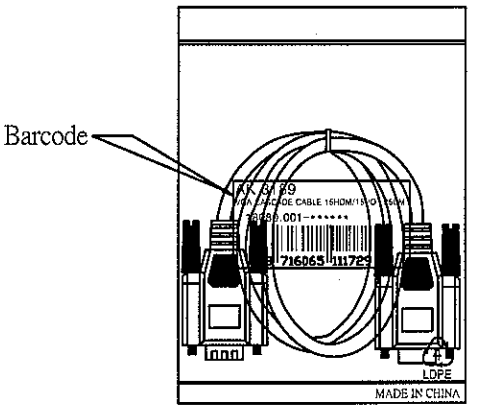

RoHS Compliant

1PCS/PE BAG(0.06*100*200mm)+Barcode

Company	IBV	Goods Code		Draw	FC001 WJF	Date	2010.02.25		D		
ITEM NO.	AK3189	Drawing Evidence:		Check		Date			C	revised the word "according"	10.03.05WJF
Goods NO.									B	REVISED, ADDING PACKAGING INFO	10.02.25CY
Original NO.	S-*******	Unit(mm)		Approval		Date	2010.03.08		VER. A	REVISE	Date