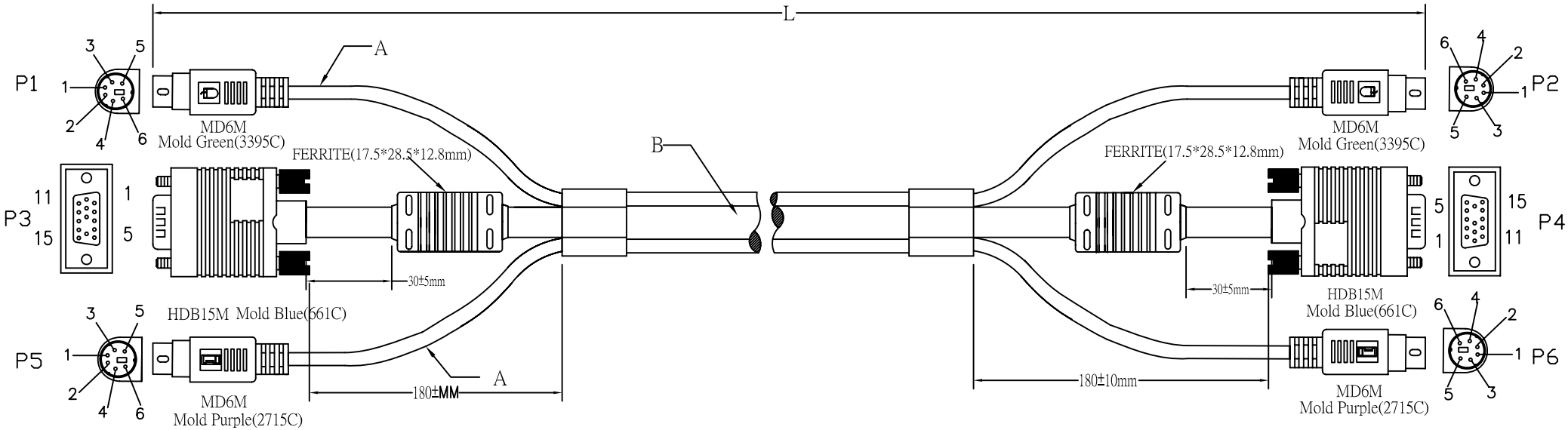

ITEM NO.	Length	Tolerance	Sticker
AK3165	5000mm	50mm	8716065111613
AK3163	3000mm	30mm	8716065111606
AK3162	2000mm	30mm	8716065111590

NOTE:

1.CABLE:(A)UL2464,28AWG*6C+AL+D,OD=5.0mm,BLACK COLOR,PVC JACKET.
(B)UL2919,28#*3COAX+28#*8C+AL+D+B,OD=9.0mm,BLACK COLOR,PVC JACKET.

2. LENGTH:L

3. CONNECTOR:HDB15M*2PCS(9Pin Out,BLUE Insulator),MD6M*4PCS.

4. MOLD:SK-904---HDB15 Molding INNER SHIELD:CONDUCTIVE COPPER FOIL 360˚ SHIELD

5. SCREW:R37.7 SCREW*4PCS.

6. CONTACTS:

MOUSE

P1	MD6M	1	2	3	4	5	6	64
P2	MD6M	1	2	3	4	5	6	64

KEYBOARD

P5	MD6M	1	2	3	4	5	6	64
P6	MD6M	1	2	3	4	5	6	64

P3	HD15M	1	2	3	6	7	8	4	5	10	13	11	14	12	15	64
P4	HD15M	1	2	3	6	7	8	4	5	10	13	11	14	12	15	64
		RC	GC	BC	RD	GD	BD									
		COAX			SPIRAL											

7. OPEN/SHORT TEST: 100% TEST.
INSULATIONS: MIN. 5M.

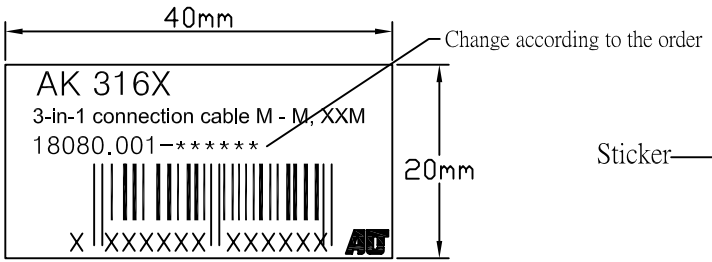

STICKER

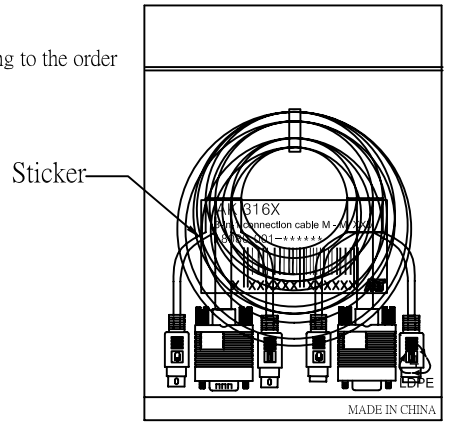

1PCS/PE BAG(0.06*190*300mm)+Sticker

RoHS Compliant

Company	IBV	Goods Code		Draw	FC001 ZXW	Date	2009.10.14		D		
ITEM NO.	AK316X	Drawing Evidence		Check		Date			C	changed 26#&24# to 28#,	10.03.29WJF
Goods NO.									B	changed 28# to 26#&24#, adding packaging info	10.03.15WJF
Original NO.	S-******	Unit(mm)		Approval		Date			VER. A	REVISE	Date