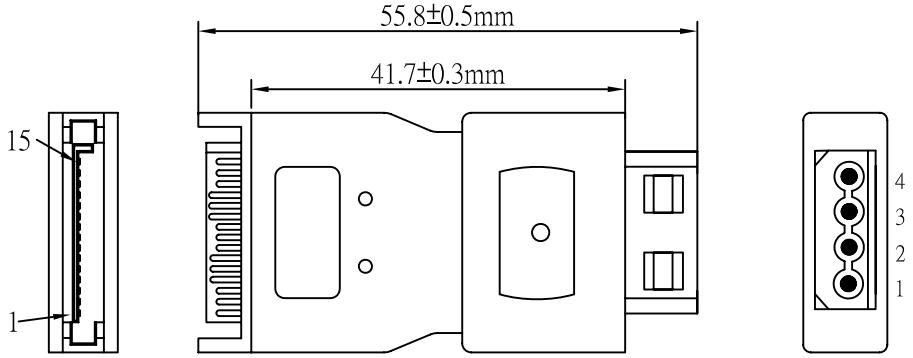

SATA 15P MALE

SATA 15M TO BIG 4P FEMALE ADAPTER
BLACK MOLDING

BIG 4P FEMALE

NOTE:

1. CABLE: UL1007 20#*4C BLACK WIRE CABLE,PVC JACKET.
2. LENGTH:55.8mm
3. CONNECTOR:SATA15P MALE*1PCS(MALE Welding 180°,PIN Length3.0Double-column pairs of guide,Terminal 3P Connected,BLACK INSULATOR),
   BIG 4P FEMALE*1PCS.
4. CONTACTS:

SATA 15P MALE	1+2+3	4+5+6	10+11+12	7+8+9	13+14+15
BIG 4P FEMALE	1	2	3	4	X

5. MOLD:BLACK MOLDING.
6. OPEN/SHORT TEST: 100% TEST.
   INSULATION:MIN. 5M.

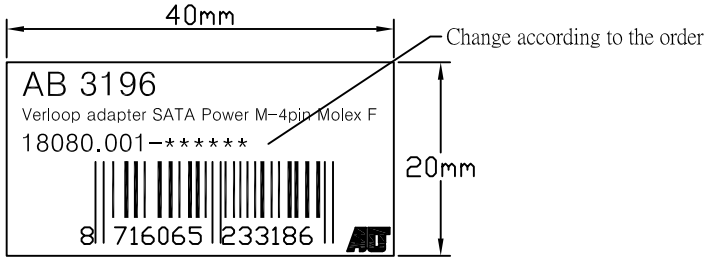

STICKER

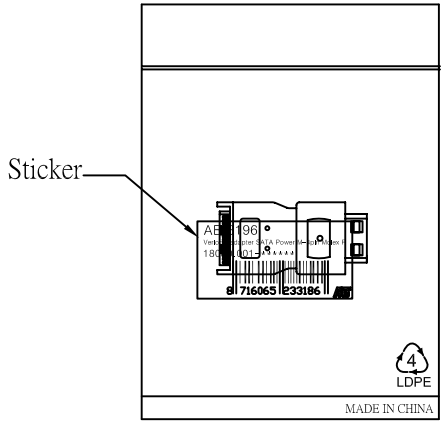

1PCS/PE BAG(0.06*100*200mm)+Sticker

Company	I.B.V	Goods Code		Draw	FC001 WJF	Date	2009.10.13		D		
ITEM NO.	AB 3196	Drawing Evidence:		Check		Date			C	Adding Packaging Info.	10.04.07CY
Goods NO.									B	With Cable Description and length	10.03.29wjf
Original NO.	S-*******	Unit(mm)		Approval		Date			VER. A	REVISE	Date