RoHS COMPLIANT

REV.	REVISION	DATE

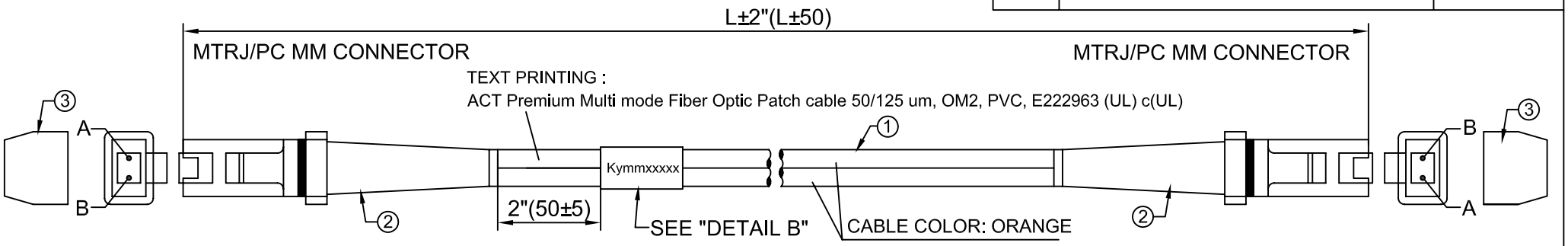

NOTE:
1. INSERTION LOSS < 0.3dB.
2. OPERATION TEMP: -25℃ TO +80℃, 5 CYCLES.
3. DURABILITY: 500 CYCLES.
4. VIBRATION: 10 TO 55 Hz 1.5mm DOUBLE AMPLITUDE.
5. TENSILE STRENGH: 10Kg.
6. PACKING:

ROUND CABLE METHOD SEE "DETAIL A"			
	BAG TYPE	QTY	LABEL
SMALL	POLYBAG	1 CABLE WITH TEST CARD	SEE "DETAIL C"
MEDIUM	POLYBAG	5 CABLES	NONE
LARGE	POLYBAG	ALL	NONE
EACH LARGE POLYBAG IN AN OUTER CARTON			

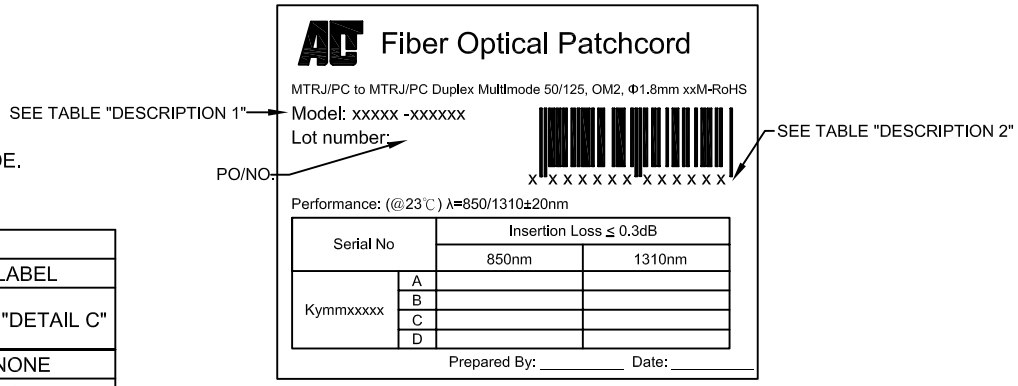

DETAIL C

FIBER PATH	
MTRJ/PC LEFT	MTRJ/PC RIGHT
A	B
B	A

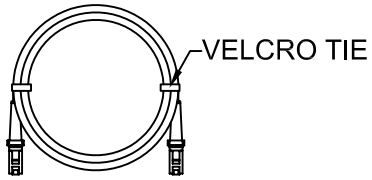

DETAIL A

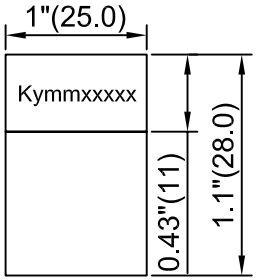

DETAIL B

y: Year; mm: Month
xxxxx: Serial Number

RL6510	10	10	32.8'(10000)	773210-RL6510	8716065224207
RL6505	05	5	16.4'(5000)	773205-RL6505	8716065224191
RL6503	03	3	9.84'(3000)	773203-RL6503	8716065224184
RL6502	02	2	6.56'(2000)	773202-RL6502	8716065224177
RL6501	01	1	3.28'(1000)	773201-RL6501	8716065224160
PART NO.	**	xx	L	DESCRIPTION 1	DESCRIPTION 2

CUSTOMER APPROVAL: DATE:

ITEM	Q'TY	PART NO.	DESCRIPTION
3	2PCS		MTRJ DUST COVER, BLACK.
2	2SETS		CONNECTOR: MTRJ/PC MM BLACK HOUSING WITH BLACK BOOT.
1	1PC		CABLE: MULTIMODE, 50/125um, 1.8mm ZIPCORD, OFNR, ORANGE JACKET.

PART LIST

	UNIT: Inches[mm]	TITLE: PATCHCORD MTRJ-MTRJ MULTIMODE DUPLEX 50/125, OM2, 1.8mm, ORANGE.	
DRAWN BY Catherine	DATE 2007/10/4		
CHECKED BY	DATE	CUSTOMER	CUSTOMER PART NO. RL65**
APPROVED BY	DATE	DRAWING NO. PK709015	Ref. NO. / REV. A
SALE BY	DATE	TRENDEX PART NO.	