| REV. | ECN NO. | DATE | SIGN | DESCRIPTION |
|---|---|---|---|---|
| B | C201807 | 2020/11/18 | Vicky | B X4 |
| C | C210021 | 2021/01/07 | Vicky | C X1 |
| D | C210227 | 2021/03/30 | Vicky | D X4 |

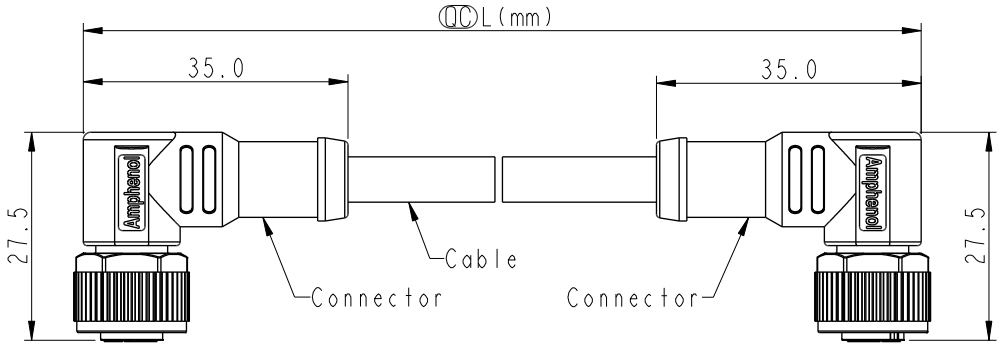


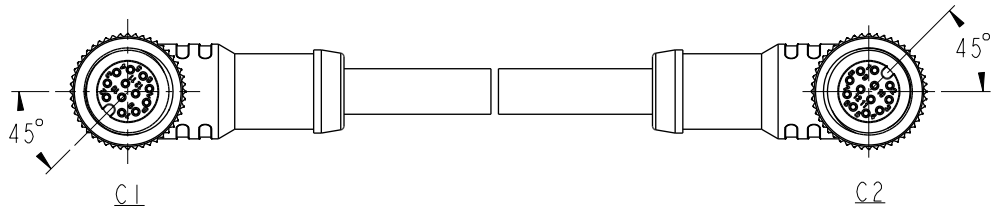

B D
Note:
* RoHS Compliant
* QC Important dimension
* Waterproof rate: IPX8, mated 1m/24h
  IPX9K, mated
* Connector
  Housing: Thermoplastic, Black
  Pin: Copper alloy, Gold plated
  O-Ring: Rubber, Green
  C Nut: Metal
  Outer Mold: Thermoplastic, Black
* Cable: UL2517, PVC Jacket, Black
* Cable Length Tolerance: 0.5M < L ≦ 1M: +60/-0 mm
  1M < L ≦ 3M: +120/-0 mm
  3M < L ≦ 5M: +160/-0 mm
  5M < L ≦ 10M: ±100 mm
  10M < L ≦ 20M: ±200 mm
  20M < L ≦ 30M: ±300 mm
  30M < L ≦ 99M: ±500 mm

| | | | | |
|---|---|---|---|---|
| UNIT: mm | TITLE: ACC, SEN, A Code, DB-ENDED FF (D) | Amphenol LTW 安費諾亮泰企業股份有限公司 | ITEM NO | DRAWN BY: Ruru | DATE: 2018-12-05 |
| TOLERANCE: ±0.5mm | SCALE: 1:1 / SIZE: A4 / SHEET 1 OF 2 | | DWG NO: (B) M12AXXFR-12AFR-SDXXX | CHECKED BY: Rita | DATE: 2018-12-05 |
| | REV.: D / WC-REV. | QC: Inspection item | CUSTOMER: ALTW | APPROVED BY: Max | DATE: 2018-12-05 |

THIS DOCUMENT IS SUBJECT TO CHANGE WITHOUT NOTICE. IT IS CONFIDENTIAL AND A PROPERTY OF Amphenol LTW. DISCLOSURE TO THIRD PARTY HAS TO BE AUTHORIZED BY Amphenol LTW.

| Contacts | Cable OD | AWG | Item No. |
|---|---|---|---|
| 12P | 6.0 | 26 | MI2A12FR-12AFR-SDXXX |
| 10P | | | MI2A10FR-12AFR-SDXXX |
| 8P | 5.5 | 24 | MI2A08FR-12AFR-SDXXX |
| 6P | 5.0 | | MI2A06FR-12AFR-SDXXX |
| 5P | 5.1 | 22 | MI2A05FR-12AFR-SDXXX |
| 4P | 4.8 | | MI2A04FR-12AFR-SDXXX |
| 3P | 4.5 | | MI2A03FR-12AFR-SDXXX |

B

MI2AXXFR-12AFR-SDXXX

XX: No. Of Pin

XXX: 0.5~99Meters
A05: 0.5 Meter
1: 01 Meter
2: 02 Meters
:
99: 99 Meters

D

| Pin Out | | |