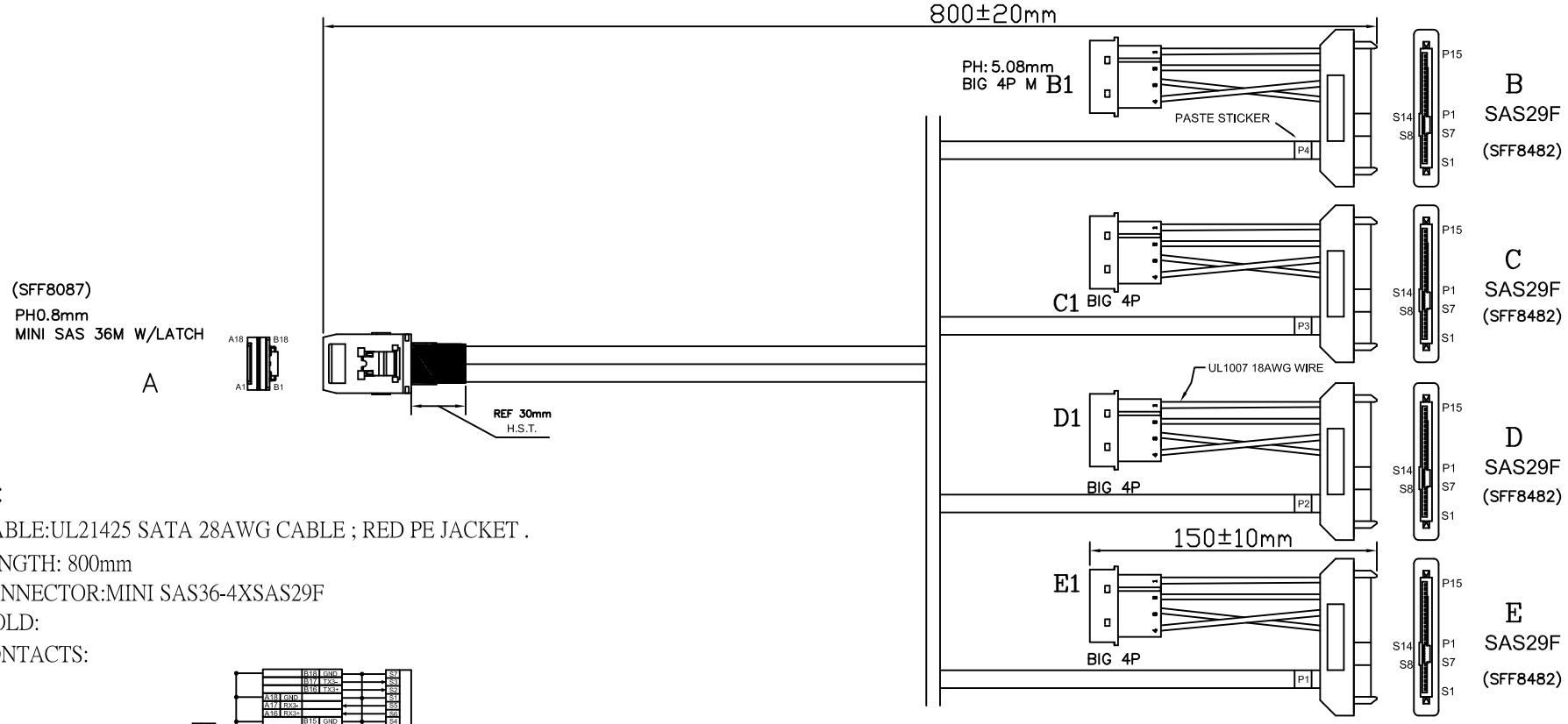

NOTE:

1. CABLE:UL21425 SATA 28AWG CABLE ; RED PE JACKET .
2. LENGTH: 800mm
3. CONNECTOR:MINI SAS36-4XSAS29F
4. MOLD:
5. CONTACTS:

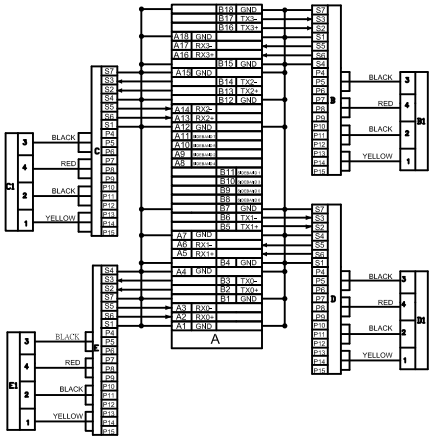

6. OPEN/SHORT TEST: 100% TEST.
INSULATION: 5M.

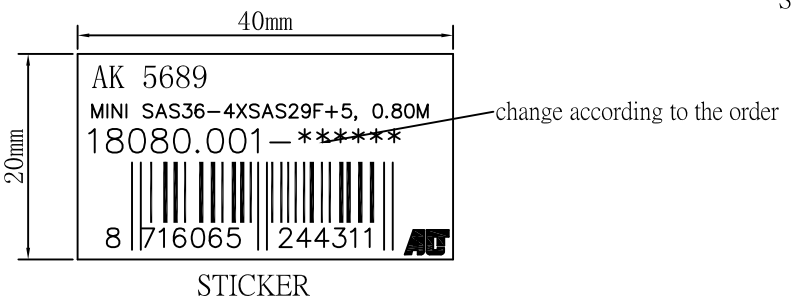

STICKER

RoHS Compliant

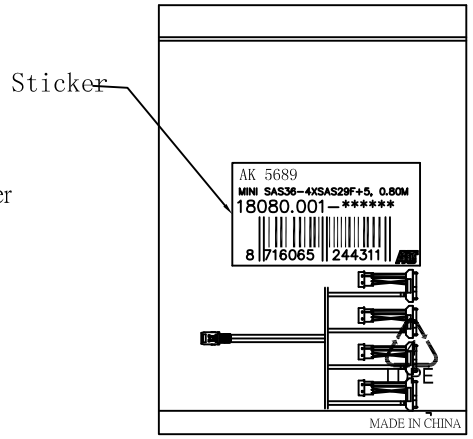

1PCS/PE BAG+STICKER

Company	IBV	Goods Code		Draw		Date	2011.08.29		D		
ITEM NO.	AK5689	Drawing Evidence		Check		Date			C	AMEND TYPING MISTAKE	
Goods NO.									B	SFF NO. PACKING	
Original NO.		Unit(mm)		Approval		Date			VER. A	REVISE	Date