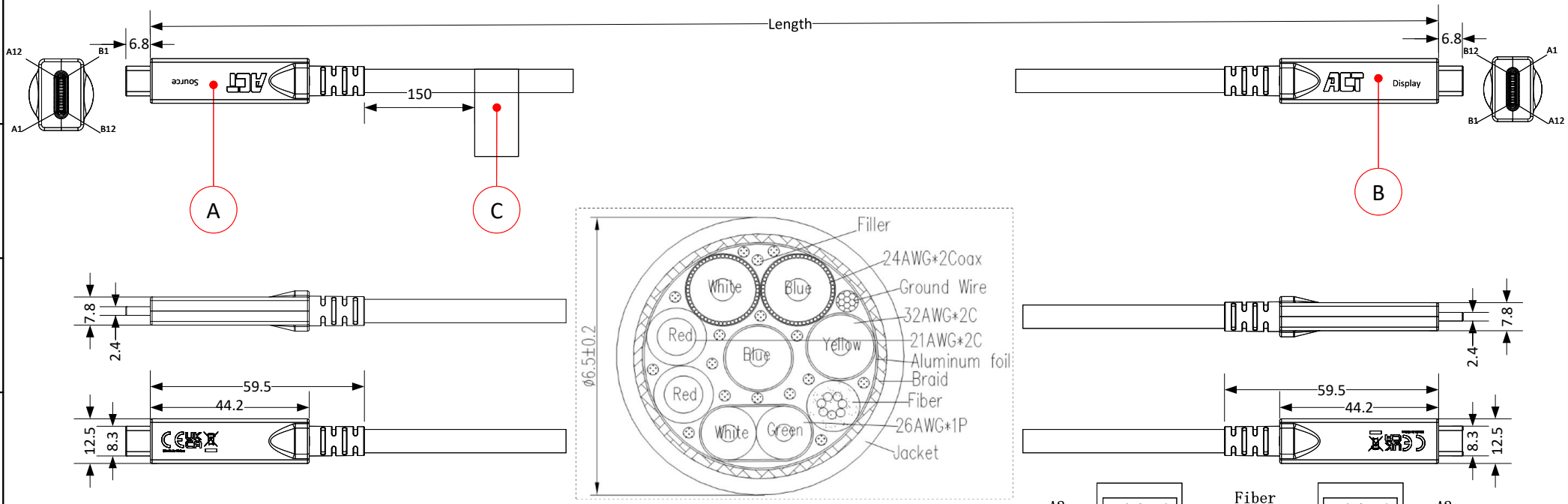

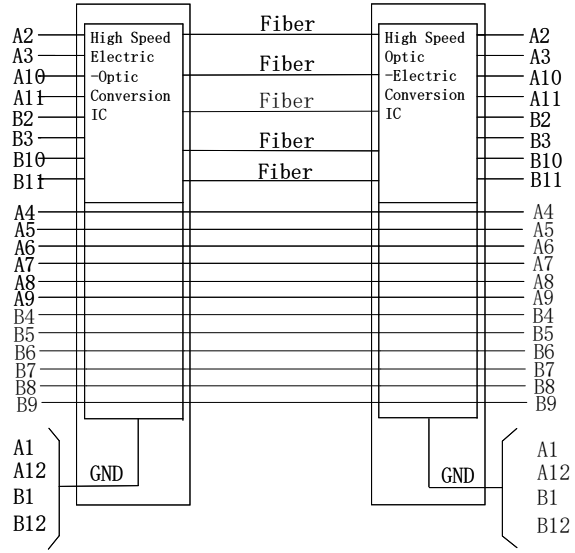

ITEM	PART	DESCRIPTION
A	USB-C male	Source connector
B	USB-C male	Display connector
A + B	Connector type	USB-C male (Zinc-alloy)
	Contacts	Nickel plated
	Hood	White plastic
	Shield type	Aluminum
	Conductor material	5x fiber + 12 copper
C	Cable colour	Black
	Outer jacket	PVC (VW-1)
	Wire gauge	30 AWG
	Outer diameter	Ø6.5 ±0.3mm
	Bend radius	≥ 20mm
	Temperature range	0°C to +50°C (+5%)
	Humidity range	10% to 80%
	Max. bandwidth	10Gbps
	Cable Filler	Kevlar
	Tensile strength	200N
	Max. resolution @ 30H	7680 x 4320 (8K)
	Max. resolution @ 60H	4096 x 2160 (4K)

Item No.	Length	Max. PD
AK4323	3m	60W
AK4325	5m	60W
AK4327	7.5m	60W
AK4330	10m	60W
AK4335	15m	40W

USB Mode	DP mode	USB mode
Data Only	N/A	USB 3.2 Gen2 (10Gbps)
4-Lane DP mode	DP 2.1 (40Gbps)	N/A
2-Lane DP mode	DP 1.4 (16.2Gbps)	N/A
4-Lane DP mode + Data	DP 2.1 (40Gbps)	USB 2.0 (480Mbps)
2-Lane DP mode + Data	DP 1.4 (16.2Gbps)	USB 3.2 Gen2 (10Gbps)

ACT Connectivity Solutions – Koolhovenstraat 1E – 3772MT – Barneveld – The Netherlands

Drawn by : MR

USB-C 4-Lane Active Optical Cable 60W USB-C male - USB-C male

Revision : 01

Date : 23-10-2024

This drawing is proprietary information of ACT Connectivity Solutions and confidential and provided to you for internal use on a need to know basis only. This document may not be duplicated for or disseminated to any third party without the prior explicit written consent of ACT Connectivity Solutions. Copies of this document, Printed or electronic, are uncontrolled and intended only for immediate use.