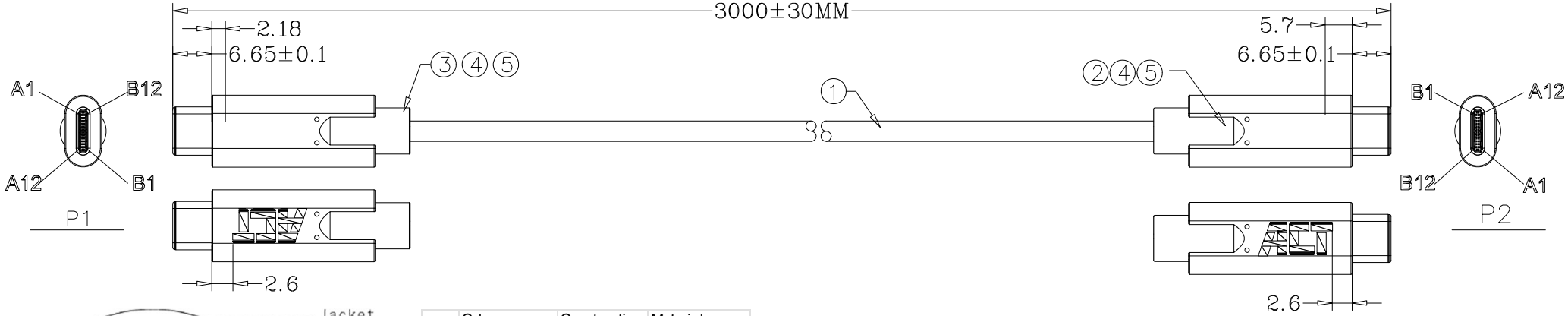

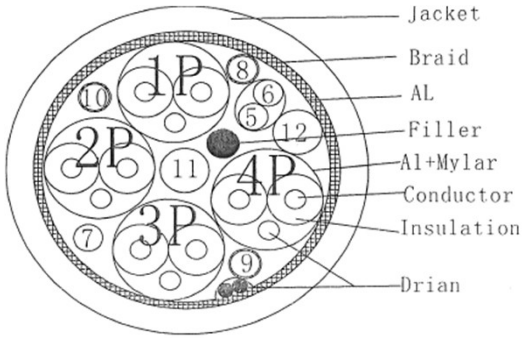

	Colour	Construction	Material
1P	White & Blue	7/0.103 mm	Tinned Copper
2P	White & Blue	7/0.103 mm	Tinned Copper
3P	White & Blue	7/0.103 mm	Tinned Copper
4P	White & Blue	7/0.103 mm	Tinned Copper
5-6	White & Green	7/0.100 mm	Tinned Copper
7	Yellow	7/0.060 mm	Tinned Copper
8	Brown	7/0.060 mm	Tinned Copper
9	White	7/0.060 mm	Tinned Copper
10	Orange	7/0.060 mm	Tinned Copper
11	Red	35/0.10 mm	Tinned Copper
12	Black	35/0.10 mm	Tinned Copper

Pin Assignment:

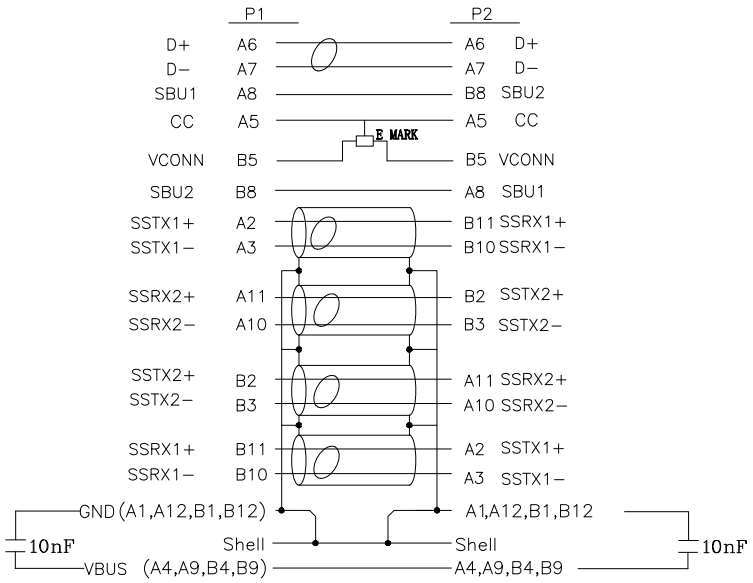

ITEM	PART	DESCRIPTION
A	USB-C male	Connector
B	USB-C male	Connector
A + B	Connector type	USB-C male
	Contacts	Nickel plated
	Hood	Black plastic
	E-marker	Yes
	Shielding	Tinned copper braid
C	Cable colour	Black
	Outer jacket	PVC
	Wire gauge	30 AWG
	Outer diameter	Ø5.5 mm
	Bend radius	12.7mm
	Conductive Resistance	4 ohms MAX
	Insulation Resistance	10M ohm MIN.
	EPR	up to 240W
	Max. bandwidth	10Gbps
	Max. PD	60W
	Max. resolution @ 30H	4096 x 2160 (4K)
	Max. resolution @ 60H	4096 x 2160 (4K)

Item No.	Length	Max. PD
AC7443	3m	60W

Additional information	
USB	1.1, 2.0, 3.0, 3.1, 3.2
Bandwidth	up to 10Gbps
PD	5, 9, 12, 15, 20V up to 5A
DP-Alt mode	Yes
Max. Resolution	4096 x 2160 (4K)
Thunderbolt support	No

Drawn by : MR

USB 3.2 10Gbps cable, USB-C male -USB-C male 60W

Revision : 01

Date : 20-01-2025

This drawing is proprietary information of ACT Connectivity Solutions and confidential and provided to you for internal use on a need to know basis only. This document may not be duplicated for or disseminated to any third party without the prior explicit written consent of ACT Connectivity Solutions. Copies of this document, Printed or electronic, are uncontrolled and intended only for immediate use.

ACT Connectivity Solutions – Koolhovenstraat 1E – 3772MT – Barneveld – The Netherlands